askon



# COUNTER MOUNT FOAM SOAP DISPENSER



**ASD-CT-01F**

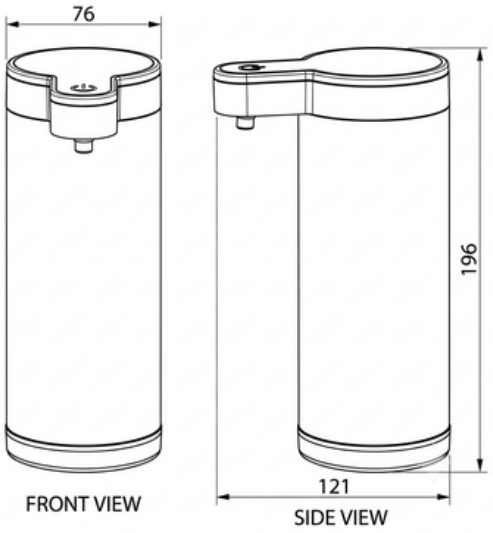


| | |
|---|---|
| **Model Number*** | ASD-CT-01F |
| **Battery** | Re-chargeable (USB C-Type) |
| **Dispenser Installation** | Counter & Wall Mount |
| **Material** | Stainless Steel & ABS |
| **Size** | H 196 x W 76 x D 121 mm |
| **Dispensing Volume** | 3 Step Adjustable |
| **Soap Tank capacity** | 350ml |
| **Soap level window** | Visible at bottom |
| **Dispenser On/Off** | with touch button |

**Viewing window for Soap Level** | **Touchless Operations** | **Hygienic Environment** | **Premium Quality**

To learn more, call us on **+91 99303 89999**,
email **info@askonhygiene.com** or visit **www.askonhygiene.com**